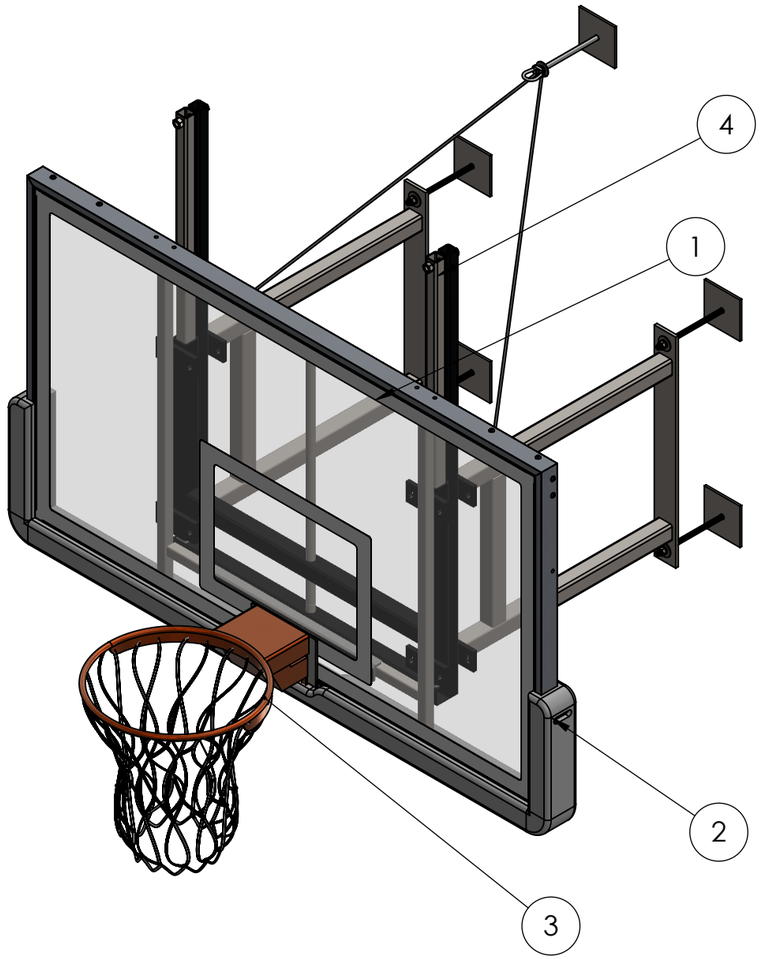

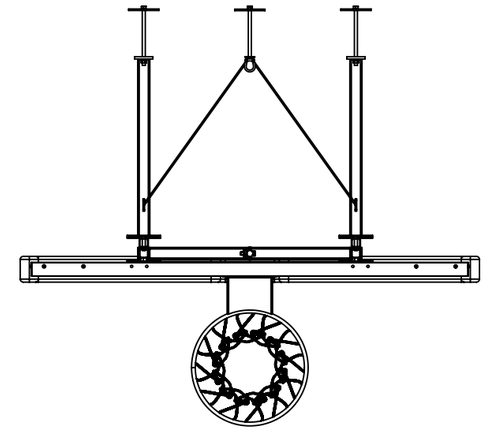

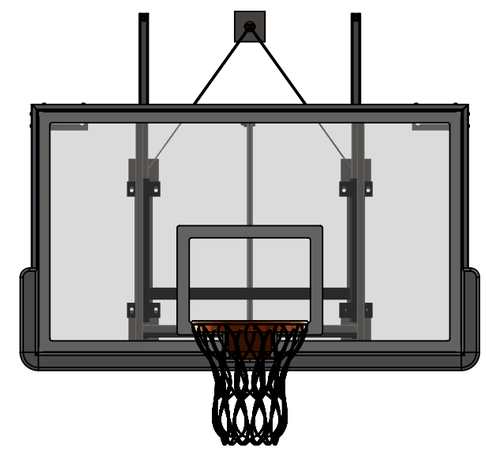

Item Number	Model Number	Description
1	F40209	Glass Rectangular 42" Regulation Backboard
2	F40210	Bolt-On Pro Mold Cushion Edge Padding
3	F40115	Collegiate Breakaway Goal
4	F49004	Height Adjuster

GENERAL NOTES / CONFIRMATIONS:

1. WORK PROVIDED BY OTHERS:
1.1. BACKING AND BLOCKING TO WALLS AND/OR CEILING STRUCTURE AS REQUIRED
1.2. ADEQUATE BUILDING STRUCTURAL SUPPORT VERIFIED BY AN ENGINEER
2. ARCHITECT AND/OR GENERAL CONTRACTOR SHALL COORDINATE LOCATIONS OF BACKSTOPS WITH LOCATIONS OF GAMES LINES, MECHANICAL & ELECTRICAL EQUIPMENT, & ALL OTHER EQUIPMENT POTENTIALLY SUBJECT TO INTERFERENCE WITH BACKSTOPS
3. ARCHITECT AND/OR GENERAL CONTRACTOR TO VERIFY BACKBOARD LOCATION AGAINST GYM FLOOR GAMES LINE SHOP DRAWINGS
4. HEIGHT, LOCATIONS, & TYPE OF STRUCTURAL SUPPORTS SHALL BE VERIFIED ON SITE
5. APPROXIMATE DEAD LOAD: FOR 305mm [1'-0"] BACKBOARD DISTANCE TO WALL, LOAD IS 240 KG [530 LBS]. FOR EVERY 305mm [1'-0"] OF ADDITIONAL BACKBOARD DISTANCE TO WALL, ADD 6.8 KG [15 LBS] OF LOAD
6. APPROXIMATE LIVE LOAD AT HOOP: 249 KG [550 LBS]
7. WALL CONNECTION POINTS, LAYOUT, ATTACHMENT METHOD AND DIMENSIONS SUBJECT TO CHANGE UPON SITE VERIFICATION AND ANY CHANGES MADE ON APPROVED SHOP DRAWING

Forum Athletic Products
9 Browning Court Unit 1
Bolton, ON, Canada L7E 1G8

Phone 905-405-1222
Fax 905-405-8532
Email info@forumathletic.ca
Webiste www.forumathletic.ca

THE INFORMATION AND DESIGNS CONTAINED IN THIS DRAWING ARE CONFIDENTIAL AND PROPRIETARY PROPERTY OF FORUM ATHLETIC PRODUCTS INC. THEY MAY NOT BE REPRODUCED OR DISTRIBUTED WITHOUT PRIOR WRITTEN CONSENT FROM FORUM ATHLETIC PRODUCTS INC.

PROJECT: Generic Drawing

DESCRIPTION: F852 Wall Mounted Fixed Backstop WMFB-1_F1

DWG NO. / PART. NO. WMFB-1

REV A

DRAWN: Jaskunwar.Singh | DATE: 2023-04-27 | SCALE: 1:25 | SHEET 1 OF 2

Backboard Type	Dim A (Bottom Mount)
Glass Rectangular Backboard 42" Regulation or 48" Tall	3035mm [9'-11 1/2"]
Wood or Steel Rectangular Backboard	3035mm [9'-11 1/2"]
Steel Fan Shaped Backboard with Rear Mount Goal	3035mm [9'-11 1/2"]
Wood Fan Shaped Backboard with Front Mount Goal	2985mm [9'-9 1/2"]
Aluminum or Steel Fan Shaped Backboard with Front Mount Goal	2934mm [9'-7 1/2"]

Note: Top cable support is only required if face of backboard to wall is 914mm [3'-0"] or greater. To determine "Dim B", add 3600mm to face of backboard to wall dimension,

Adjustable frame accessory does not change mounting height for any backboard type.

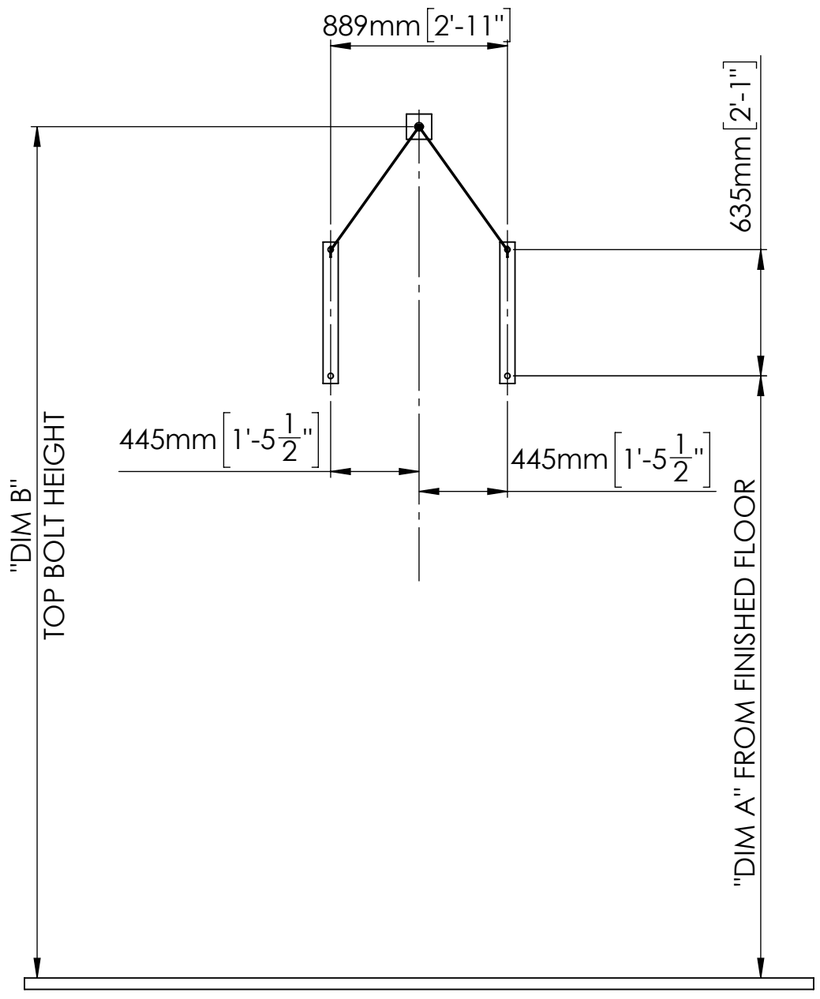

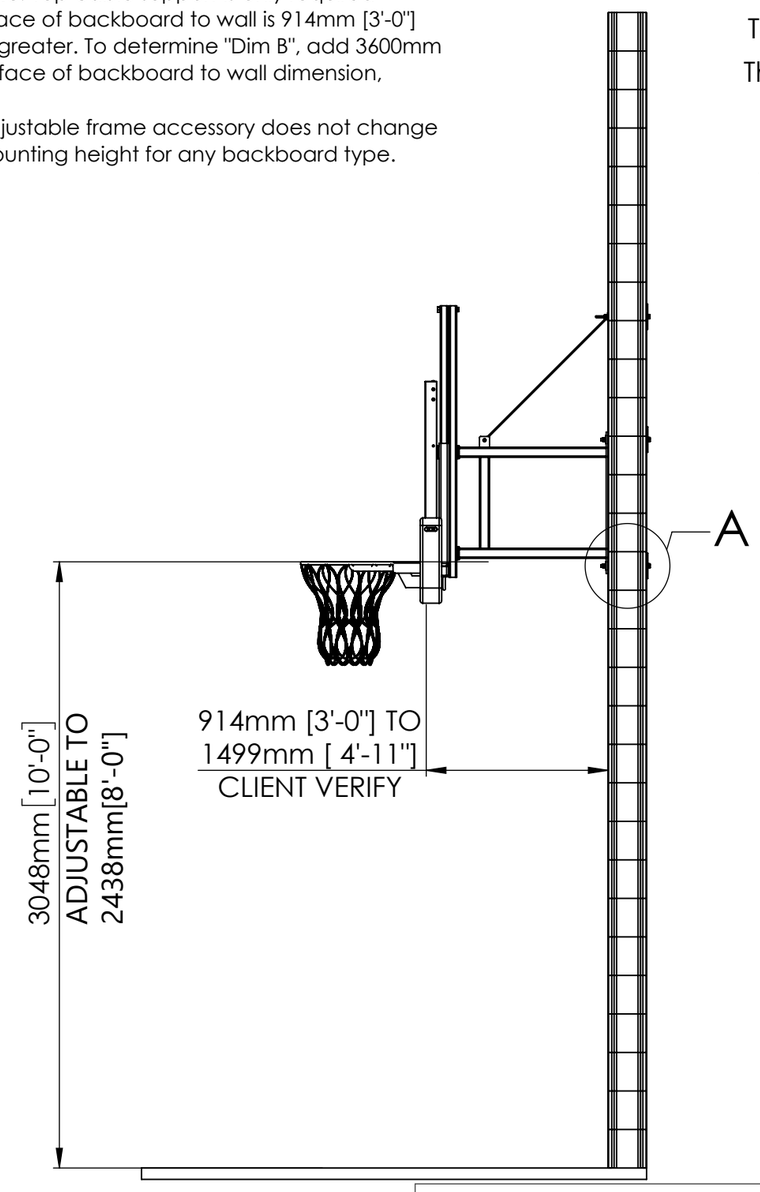

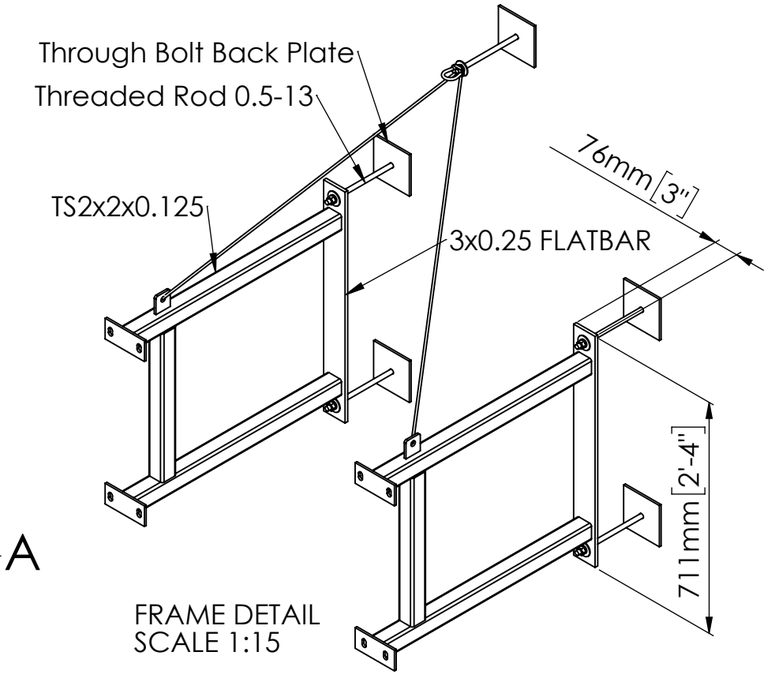

FRAME DETAIL
SCALE 1:15

NOTE: Adequate Backing And Blocking To Be Verified By Project Engineer And Provided By Others

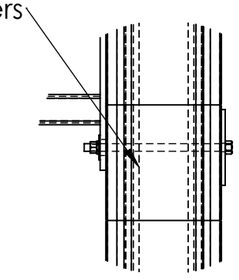

DETAIL A
SCALE 1 : 10

QUANTITY	

FORUM ATHLETIC PRODUCTS

Forum Athletic Products
9 Browning Court Unit 1
Bolton, ON, Canada L7E 1G8

Phone 905-405-1222
Fax 905-405-8532
Email info@forumathletic.ca
Webiste www.forumathletic.ca

THE INFORMATION AND DESIGNS CONTAINED IN THIS DRAWING ARE CONFIDENTIAL AND PROPRIETARY PROPERTY OF FORUM ATHLETIC PRODUCTS INC. THEY MAY NOT BE REPRODUCED OR DISTRIBUTED WITHOUT PRIOR WRITTEN CONSENT FROM FORUM ATHLETIC PRODUCTS INC.

PROJECT: Generic Drawing

DESCRIPTION: F852 Wall Mounted Fixed Backstop WMFB-1_F1

DWG NO. / PART. NO. WMFB-1

REV A

DRAWN: Jaskunwar.Singh | DATE: 2023-04-27 | SCALE: 1:30 | SHEET 2 OF 2